EFPM M10 12 V4A MVK8.10 STTZN (478 112)

Figure without obligation

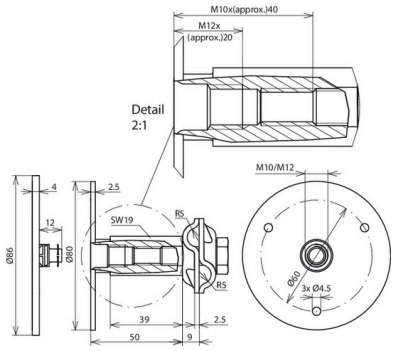

Type Part No.	EFPM M10 12 V4A MVK8.10 STTZN 478 112
Connection thread	M10 / M12
Material of plate	StSt (V4A)
Material No.	1.4571 / 1.4404 / 1.4401
ASTM / AISI:	316Ti / 316L / 316
Material of MV clamp	St/tZn
Connection plate Ø	80 mm
Short-circuit current (AC 50 Hz / DC) (1 s; ≤ 300 °C)	9.3 kA
Minimum lengths of M10 screws	35 mm (thread length 40 mm)
Minimum lengths of M12 screws	15 mm (thread length 20 mm)
Standard	EN 62561-1
Weight	276 g
Customs tariff number (Comb. Nomenclature EU)	85389099
GTIN	4013364118140
PU	25 pc(s)

We reserve the right to introduce changes in performance, configuration and technology, dimensions, weights and materials in the course of technical progress. The figures are shown without obligation.